DO NOT SCALE - IF IN DOUBT ASK

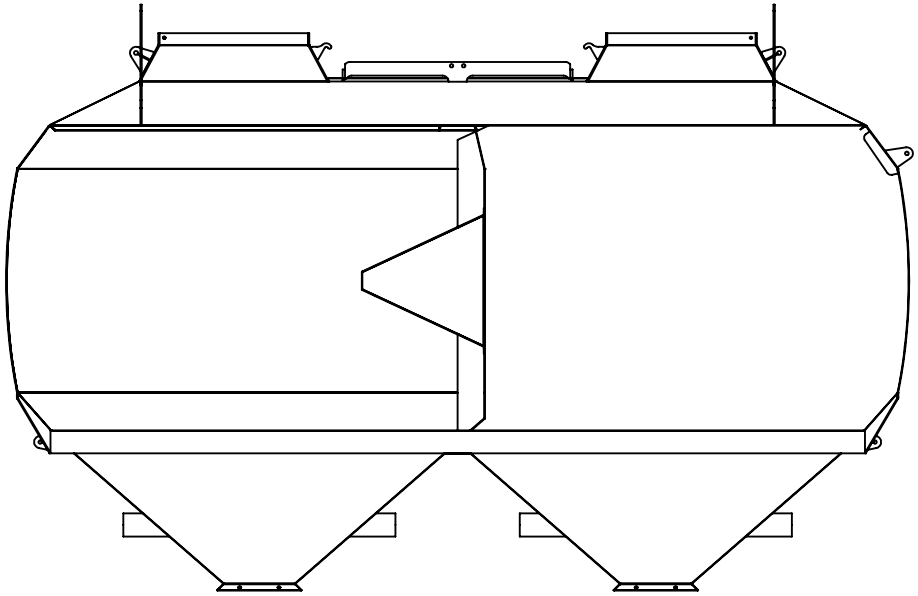

50% / 50%

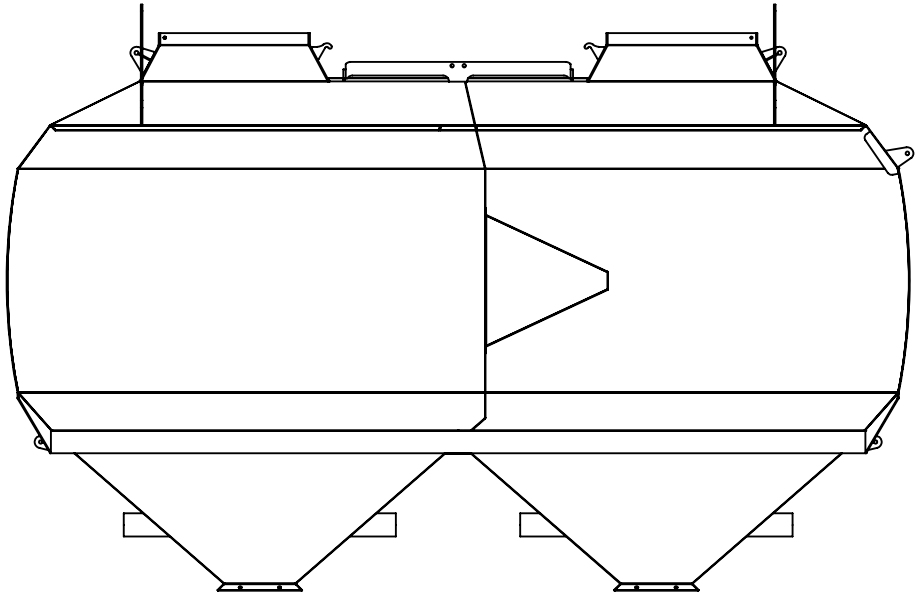

54.8% / 45.2%

Total Bin Volume = 7248L @ 25°

Fabrication Note	General Tolerances			
.	Linear Dimensions	This drawing is the property of Simplicity (Australia) Pty. Ltd. It must not be used for any purpose other than that for which it is supplied. Reproduction in whole or part is prohibited without written authority from Simplicity (Australia) Pty. Ltd.	DRN: TS	**SIMPLICITY (AUSTRALIA) PTY LTD**
Finish:	X ±1mm (whole numbers) X.X ±0.5mm (one decimal place) X.XX ±0.25mm (two decimal places)		DATE: 05/02/2007	18 LOUDOUN RD DALBY 4405 PH (07) 4662 2977 FAX (07) 4660 6050
	Angular Dimensions		APPR'D:	TITLE Simplicity Airseeder Bins 7000 Double Bin W.A.
	All Angles ±2°		DATE: / /	
			SCALE: 1:25	
				DRAWING NUMBER **7000 Bin Split** REV 01 SHEET 2 OF 2 A4

S:\3dcad-Sw\3D-R&D Work\Trevor R&D\Trevor PDM\12000LTB\7000 Bin Split(Date Created)Monday, 5 February 2007 9:22:39 AM(Last Saved)Friday, 7 December 2007 11:27:41 AM(Last Saved by)trevorschelberg